ARCTIC STEEL

STRENGTH PERFORMANCE RELIABILITY

1.0″ Bottom In Side Out (BISO)

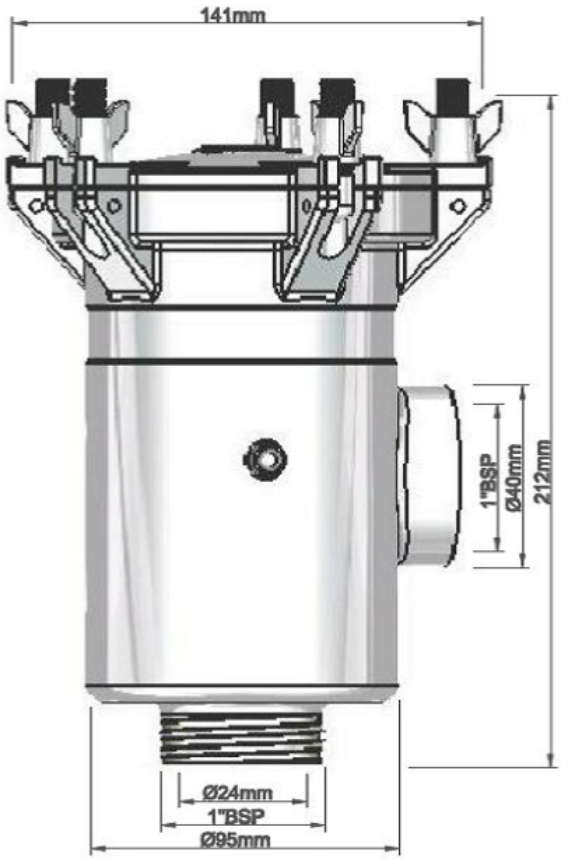

- Vertical male inlet, side female outlet.
- BSP or NPT thread.
- Electro-polished AISI 2205 Cast Stainless Steel Body.
- Solid electro-polished stainless steel lid or
- Clear 8mm poly carbonate lid option available.
- Secured by 5 Stainless Steel wing nuts for safe, quick and easy access.
- Swing down eye bolts eliminate need to remove nuts.
- Full height, high impact resistance ABS basket.
- Durable silicone gasket.
- Anode connection point to combat electrolysis.
- Side mounting bracket availble (316 SS)
- Adjustable bracket extension arm also available (316 SS)

Strainer Solid Lid Weight Kg	Strainer Clear Lid Weight Kg	Flow Rate 0.1 bar L/Min	Flow Rate 1 Bar L/Min
3.1kg	3.0kg	138	431